九齊科技股份有限公司

Nyquest Technology Co., Ltd.

DATA SHEET

NY9M008A

Single Channel 0.9A Motor Driver

Version 1.2

May 15, 2015

Revision History

Version	Date	Description	Modified Page
1.0	2014/04/16	New release.	-
1.1	2014/08/04	1. Update application circuit. 2. Delete die form shipping and add Tape & Reel shipping.	7 9
1.2	2015/05/15	1. Modify motor current to 900mA. 2. Update DC characteristics.	3, 4 6

1. 概述

NY9M008A 為單晶片CMOS的雙向馬達驅動IC，利用大型積體電路(LSI)製造技術，具有低電源及低成本的特性，可應用於低電壓工作模式。電路採用H橋架構，內置功率 MOSFET 開關，可實現對直流電機做 正轉、反轉、煞車、停止 四個功能的控制。

2. 功能

(1). 寬廣的工作電壓： 1.8V ~ 9.0V。

(2). 內置 PMOS/NMOS 功率開關的 H 橋驅動器。

(3). 支援4種操作模式：正轉 / 反轉 / 剎車 / 停止。

(4). 低待機電流 (Typ.=0.1uA)。

(5). 900mA 以上電流輸出能力。

(6). 內建過溫保護功能 。(TSD, Thermal Shutdown)

(7). CMOS 輸入，輸入腳內建下拉電阻，無需外加限流電阻。

(8). 高達 5KV 的人體靜電模式 (HBM) 的 ESD 保護。

(9). 提供 SOP-8 和 ESOP-8 封裝。

8-pin SOP-8

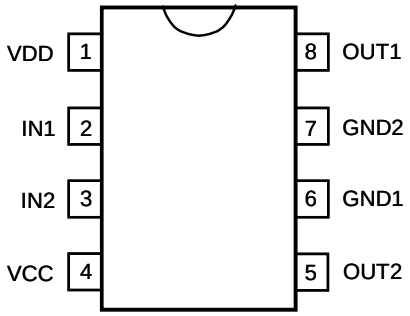

8-pin ESOP-8

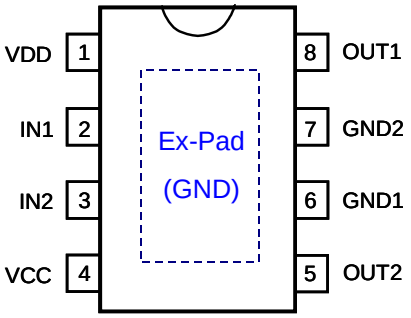

：外部焊墊。
連接到PCB的接地散熱片以利散熱。

1. GENERAL DESCRIPTION

NY9M008A is a single-chip bi-directional motor driver CMOS IC for low-voltage applications. It is designed by LSI high technology with a low-power and low-cost process. It has H bridge driver of built-in MOSFET power switch to provide Forward / Reverse / Brake / Stop function for motor driver applications.

2. FEATURES

(1). Wide operating voltage: 1.8V ~ 9.0V.

(2). H bridge driver of internal PMOS/NMOS power switches.

(3). Support 4 operating mode: Forward / Backward / Brake / Stop.

(4). Low standby current. (Typ.=0.1uA)

(5). Over 900mA output current capability.

(6). Built-in Thermal Shutdown (TSD) circuit.

(7). CMOS input. Built-in input pull-low resistance and no current-limit resistance required.

(8). High 5KV Human Body Mode (HBM) ESD protection.

(9). SOP-8 and ESOP-8 package type are available.

8-pin SOP-8

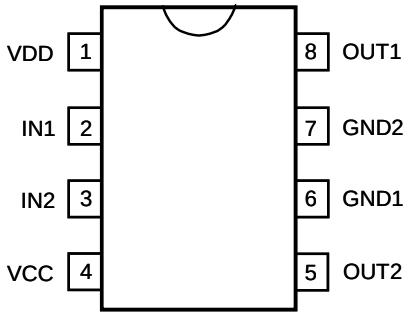

8-pin ESOP-8

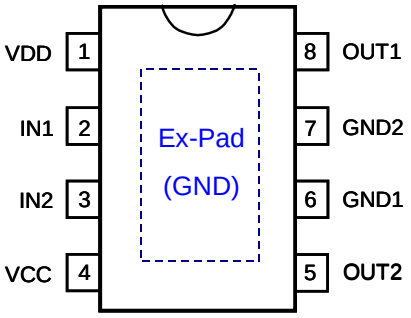

: Exposed Pad.
Connect to PCB ground plane for heat dissipation.

3. BLOCK DIAGRAM

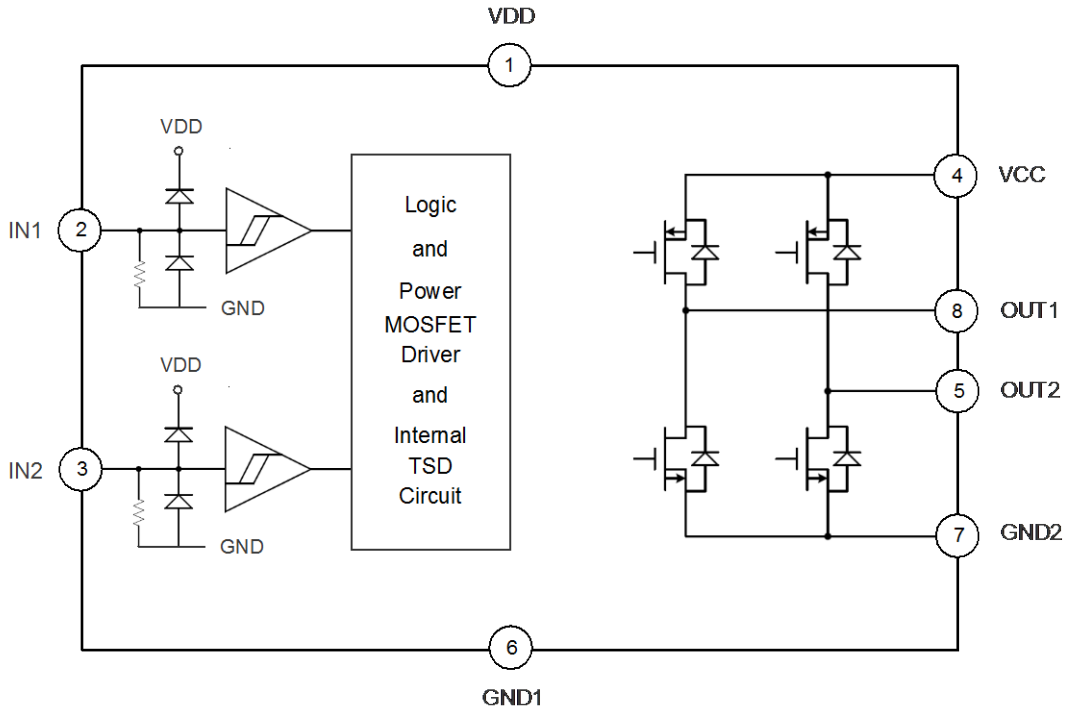

4. PIN DESCRIPTION

Pin Name	*Pin No.*	*ATTR.*	*Description*
IN1	2	I	Forward rotation logic input.
IN2	3	I	Backward rotation logic input.
OUT1	8	O	Forward rotation output.
OUT2	5	O	Backward rotation output.
VDD	1	Power	Positive power of logic control circuit.
VCC	4	Power	Positive power of output power MOSFET.
GND1	6	Power	Negative power of logic control circuit.
GND2	7	Power	Negative power of output power MOSFET.
Ex-Pad	9	Power	Exposed pad for thermal tab, must be connected to GND.

5. FUNCTION DESCRIPTION

IN1	*IN2*	*OUT1*	*OUT2*	*Function*
0	0	Z (Off)	Z (Off)	Stop (Standby)
1	0	1	0	Forward
0	1	0	1	Backward
1	1	0	0	Brake

6. ELECTRICAL CHARACTERISTICS

6.1 Absolute Maximum Rating

Symbol	Parameter		Rating	Unit
V_{DD} - V_{SS}	Supply voltage of logic control circuit		-0.5 ~ +7.5	V
V_{CC}	Supply voltage of output power MOSFET		9.6	V
$I_{OUT\text{-}PEAK}$	Output peak current		2.0	A
θ_{JA}	Thermal resistance (Junction to Ambient)	SOP-8	150	°C/W
		ESOP-8	60	
P_D	Power dissipation	SOP-8	0.9	W
		ESOP-8	2.3	
T_A	Operating ambient temperature		-40 ~ +85	°C
T_J	Operating junction temperature		+160	°C
T_{ST}	Storage temperature		-55 ~ +160	°C

6.2 DC Characteristics *(V_{DD}=3.0V, V_{CC}=6.0V, T_A=25ºC, unless otherwise specified)*

Symbol	Parameter		Min.	Typ.	Max.	Unit	Condition
V_{DD}	Operating voltage (Logic)		1.8		6.8	V	
V_{CC}	Operating voltage (MOSFET)		1.8		9.0	V	
I_{SB}	Standby current			0.1	1	uA	IN1=IN2=0
I_{OP}	Operating current	$V_{DD} = V_{CC} = 3.0V$		200		uA	IN1=1, IN2=0 or IN1=0, IN2=1 or IN1=1, IN2=1
		$V_{DD} = V_{CC} = 6.0V$		270		uA	
I_{IH}	Input high current (12kΩ pull-low resistance)			260		uA	$V_{IH} = 3.0V$
				510		uA	$V_{IH} = 6.0V$
V_{IH}	Input high voltage		$0.7V_{DD}$			V	
V_{IL}	Input low voltage				$0.3V_{DD}$	V	
R_{ON}	Output resistance (SOP-8 Package)			0.68		Ω	$I_{OUT} = 500mA$
				0.77		Ω	$I_{OUT} = 800mA$
				0.92		Ω	$I_{OUT} = 1200mA$
	Output resistance (ESOP-8 Package)			0.60		Ω	$I_{OUT} = 500mA$
				0.65		Ω	$I_{OUT} = 800mA$
				0.79		Ω	$I_{OUT} = 1200mA$
I_{OUT}	Output continuous current (* with PCB heat dissipation)			900	1200*	mA	SOP-8
				1100	1600*	mA	ESOP-8
I_{PULSE}	Pulsed drain current				5.0	A	Pulse width < 20ms
T_{RISE}	Output rise time			300		ns	PWM=20kHz, Duty=50%
T_{FALL}	Output fall time			120		ns	
T_{RP}	Input-to-Output response time			250		ns	
T_{TSD}	Thermal shutdown (TSD)			160		°C	Junction temperature
T_{TSDH}	Thermal shutdown hysteresis			35		°C	

7. APPLICATION CIRCUIT

(1) One Motor Bi-Directional Control (Single Power)

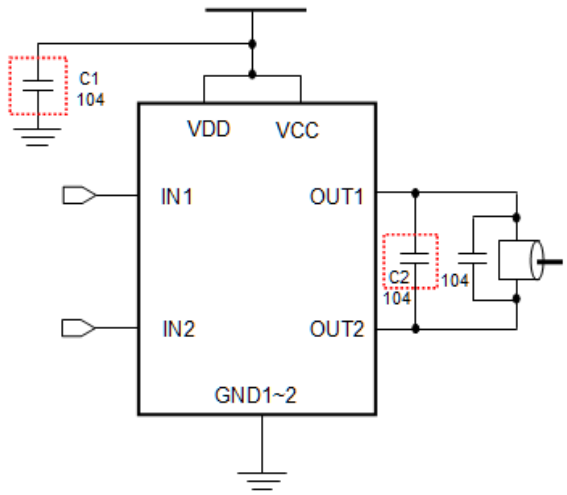

(2) Two Motors Directional Control (Single Power)

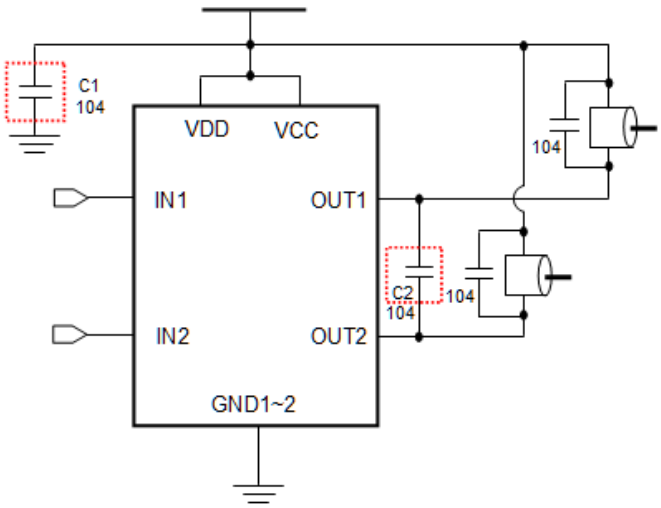

(3) One Motor Bi-Directional Control (Dual Power)

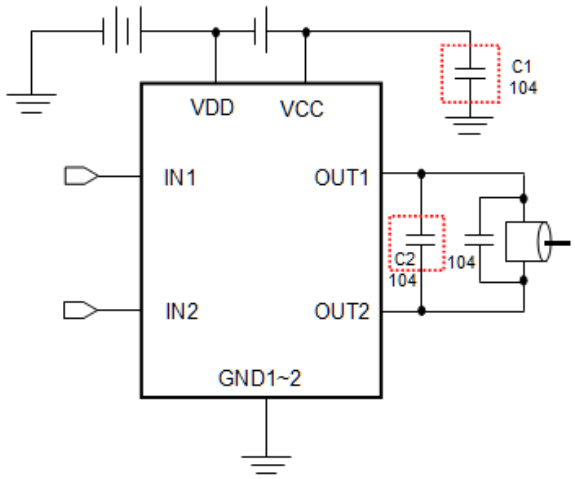

(4) Two Motors Directional Control (Dual Power)

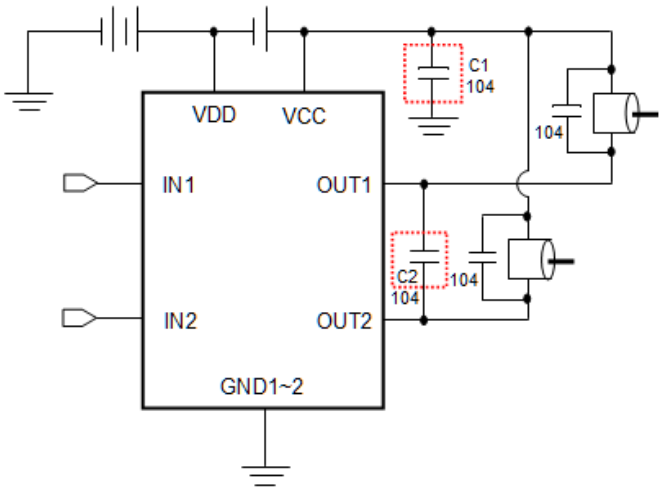

** In normal application, C1 (0.1uF) can be saved, but please reserve C1 space at PCB layout.*

** If voltage is higher than 6.0V, C2 (0.1uF) is necessary to endure high voltage.*

8. PACKAGE DIMENSION

8.1 8-Pin Plastic SOP (150 mil)

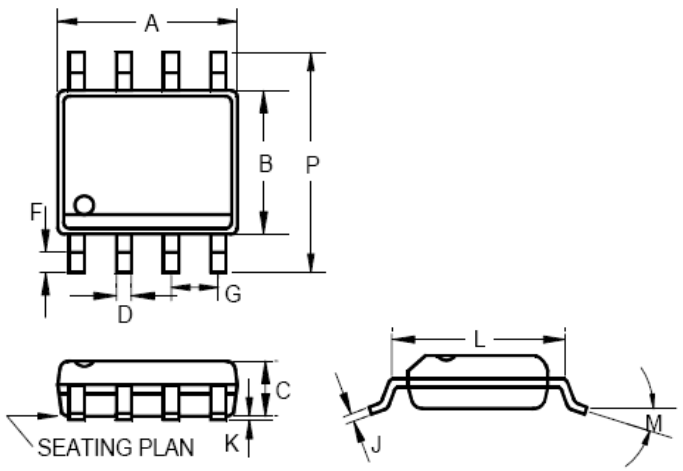

	INCHES			MILLIMETERS		
	MIN	TYP	MAX	MIN	TYP	MAX
A	0.183	-	0.202	4.65	-	5.13
B	0.144	0.150	0.163	3.66	3.81	4.14
C	0.068	-	0.074	1.35	-	1.88
D	0.010	-	0.020	0.25	-	0.51
F	0.015	-	0.035	0.38	-	0.89
G	0.050 BSC			1.27 BSC		
J	0.007	-	0.010	0.19	-	0.25
K	0.005	-	0.010	0.13	-	0.25
L	0.189	-	0.205	4.80	-	5.21
M	-	-	8°	-	-	8°
P	0.228	-	0.244	5.79	-	6.20

Note: For 8-pin SOP IC, 100 units per tube.

8.2 8-Pin Plastic ESOP with Exposed Pad (150 mil)

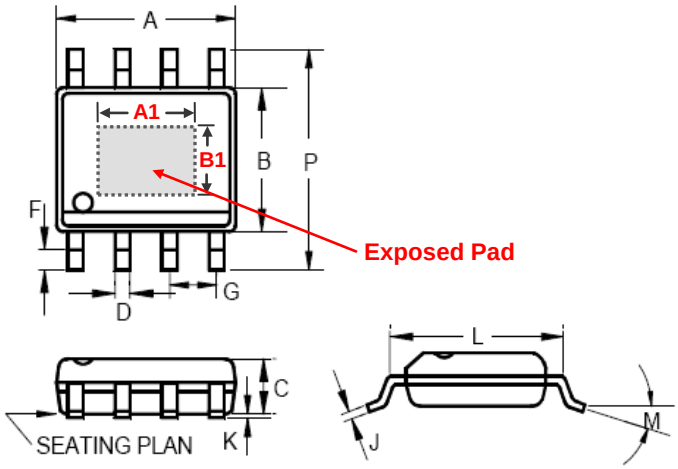

	INCHES			MILLIMETERS		
	MIN	TYP	MAX	MIN	TYP	MAX
A	0.183	-	0.202	4.65	-	5.13
B	0.144	0.150	0.163	3.66	3.81	4.14
C	0.068	-	0.074	1.35	-	1.88
D	0.010	-	0.020	0.25	-	0.51
F	0.015	-	0.035	0.38	-	0.89
G	0.050 BSC			1.27 BSC		
J	0.007	-	0.010	0.19	-	0.25
K	0.005	-	0.010	0.13	-	0.25
L	0.189	-	0.205	4.80	-	5.21
M	-	-	8°	-	-	8°
P	0.228	-	0.244	5.79	-	6.20
A1	0.077		0.090	1.95	-	2.28
B1	0.077		0.090	1.95	-	2.28

Note: For 8-pin SOP IC, 100 units per tube.

9. ORDERING INFORMATION

P/N	*Package Type*	*Package Width*	*Shipping*
NY9M008AS8	SOP-8	150 mil.	Tape & Reel: 2.5K pcs per Reel Tube: 100 pcs per Tube
NY9M008AE8	ESOP-8	150 mil.	